HSF Pb RoHS

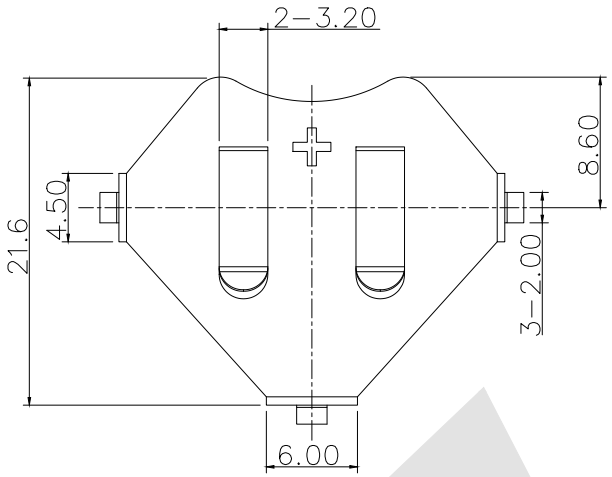

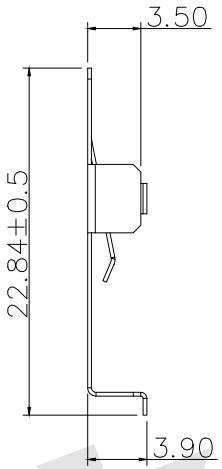

NOTE:
1. ALL INSIDE BEND RADII TO BE A MIN. OF MATERIAL THICKNESS UNLESS OTHERWISE SPECIFIED.
2. PART MUST BE FREE OF ALL BURRS AND SHARP EDGES.
3. MAT'L:0.254 TH'K FULL HARD PHOSPHOR BRONZE
4. FINISH:NICKEL PLATE 0.00254-0.00762 NICKEL, OVER 0.00127-0.00254 COPPER
5. INDICATES CRITICAL DIMENSION

Order code:

BS - M - SI- R - CR2430
① ② ③ ④ ⑤

① BS: Battery Contacts

② Apperance for the product
M:SMT TYPE
S:180 TYPE
R:90 TYPE

③ Contact PIating
SI:NICKEL PLTD
SN:Tin
G0:GOld flash
G1: 3U″ Gold
G2: 5U″ Gold
G3:10U″ Gold
G4:15U″ Gold
G5:30U″ Gold

④ Packing method
A: Tray packing
R: Tape & reel packing

⑤ Product number
CR2430

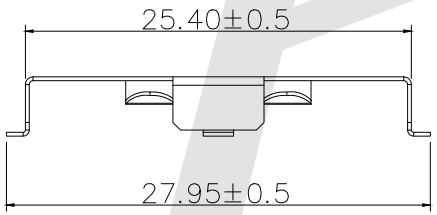

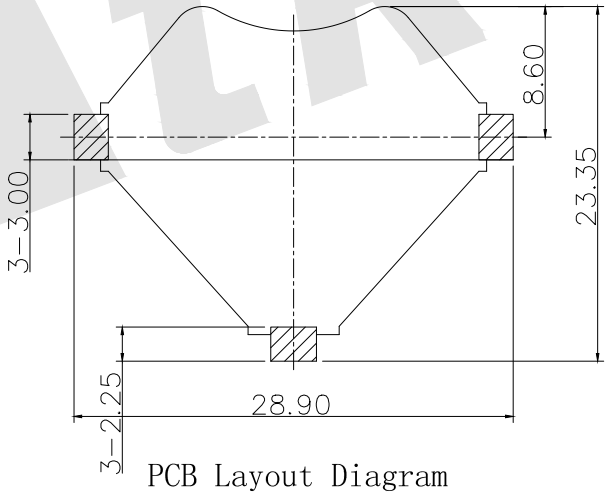

PCB Layout Diagram
Top View

REV	DESCRIPTION	DATE

Unless Otherwise specified tolerance
X. ±0.35 X.XX: ±0.20
X.X: ±0.25 X.XXX: ±0.15

SCALE: As Shown	UNIT: mm
DRAW ZLA	DATE 21/07/2022
CHECK BobYang	DATE 21/07/2022

3rd ANGLE PROJECTION

Atkconn® ATKCONN ELECTRONICS CO,.LTD
Http://www.atkconn.com

TITLE: BATTERY CONTACTS FOR CR2430

DRAWING NO: BS-M-SI-R-CR2430

PRODUCT NO: BS-M-SI-R-CR2430

Atkconn