HSF Pb RoHS

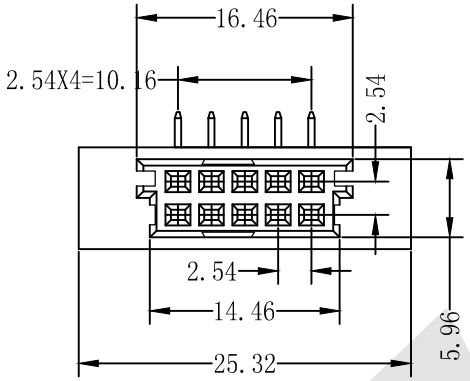

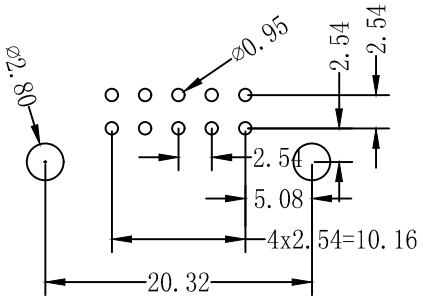

Recommended P.C.B.Layout

SPECIFICATION

Current Rating:	2.0Amp
Insulation Resistance:	1000MΩ min.at DC 100V
Contact Resistance:	20mΩ max
Withstand Voltage:	AC 1000V For 1 Minute
Operating Temperature:	-55° C to +105° C
Contact Material:	Brass
Contact Plating:	Au or Sn Over Ni
Insulator Material:	PBT+30%GF UL 94V-0
Insertion Force:	20 pin max.18N
Withdrawal Force:	0.15N min.per individual contact

Ordering Code:

DFR - XX - X - X - X -222

① ② ③ ④ ⑤ ⑥

① Series No:

② No.of Contacts
10P 05P

③ Termination
B:Right tail length H=3.0mm
J:Right tail length H=7.0mm

④ Rows Loaded With Contacts
A:Row a
A1:Row a+b(2,4,6...)
C:Row a+b

⑤ Contact Plating
G0: Gold flash
S0: Gold flash/Ni
G1: 3u″ Gold
S1: 3u″ Gold/Ni
G2: 5u″ Gold
S2: 5u″ Gold/Ni
G3: 10u″ Gold
S3: 10u″ Gold/Ni
G4: 15u″ Gold
S4: 15u″ Gold/Ni
G5: 30u″ Gold
S5: 30u″ Gold/Ni
SN: Tin

⑥ Series number
222

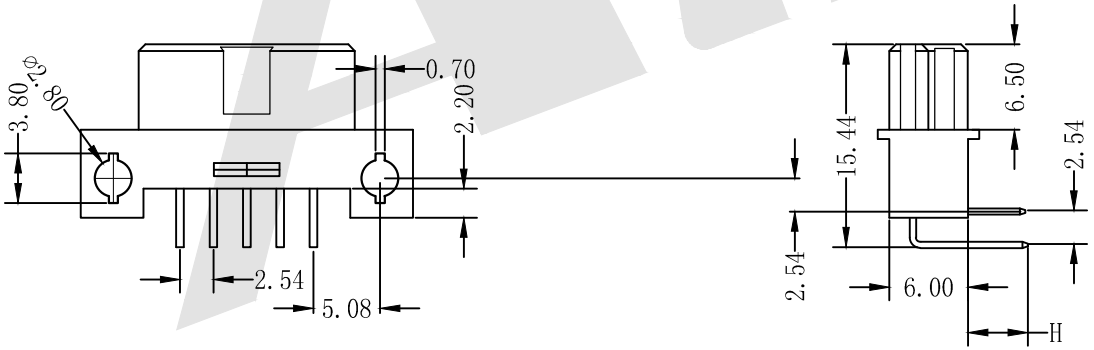

Code	Number Of Contacts	Contact Arrangement	Rows With Contacts	Pitch
A	5	a b	a	2.54
C	10	a b	a b	2.54

Unless Otherwise specified tolerance
X. ±0.35 X.XX: ±0.20
X.X: ±0.25 X.XXX: ±0.15

SCALE: As Shown | UNIT: mm
DRAW ZLA | DATE 24/04/2022
CHECK BobYang | DATE 24/04/2022

3rd ANGLE PROJECTION

Atkconn® ATKCONN ELECTRONICS CO,.LTD
Http://www.atkconn.com

TITLE: DIN41612 Right Angle Female Type 1/3Q Connectors-Inversed 10 Positions

DRAWING NO: DFR-XX-XXX-222
PRODUCT NO: DFR-XX-XXX-222

REV	DESCRIPTION	DATE

Atkconn